TruMet PW100

High accuracy, low maintenance solid-state optical rain gauge.

PRODUCT OVERVIEW

Gill's TruMet PW100 is an ultra-reliable, low-maintenance alternative to traditional tipping bucket rain gauges. It delivers accurate rainfall data as a standalone unit or when combined with our MetConnect or MaxiMet weather station ranges, including the fully integrated MaxiMet GMX603.

With no moving parts, TruMet PW100 is a plug-and-play solution designed to replicate the output of a conventional tipping bucket, without the burden of maintenance or recalibration.

KEY FEATURES & BENEFITS

01 High quality, accurate, solid-state liquid precipitation sensor.

02 Minimal maintenance requirement.

03 Extensively tested and designed to deliver accuracy with high correlation to tipping bucket measurement.

04 High quality measurement data due to unique sensor technology and extensive design testing and verification.

05 Less susceptible to debris blockage and requiring less maintenance than a tipping bucket.

06 Minimal set-up required and easily integrates with existing systems.

TYPICAL APPLICATIONS

- Hydrometeorology
- Flood monitoring
- Environmental monitoring
- Agriculture
- Water management
- Infrastructure projects

TruMet PW100measures liquid precipitation using high accuracy optic technology.

TruMet PW100

High accuracy, low maintenance, solid-state optical rain gauge.

TECHNICAL SPECIFICATION

Precipitation	
Measurement type	Optical
Accuracy	≤ 5%
Tip size	0.1 mm
Measurement surface area	66 X 20 mm
Intensity range	0 to 200 mm/hr
Precipitation types	Liquid precipitation

Warranty	
Warranty	24 months

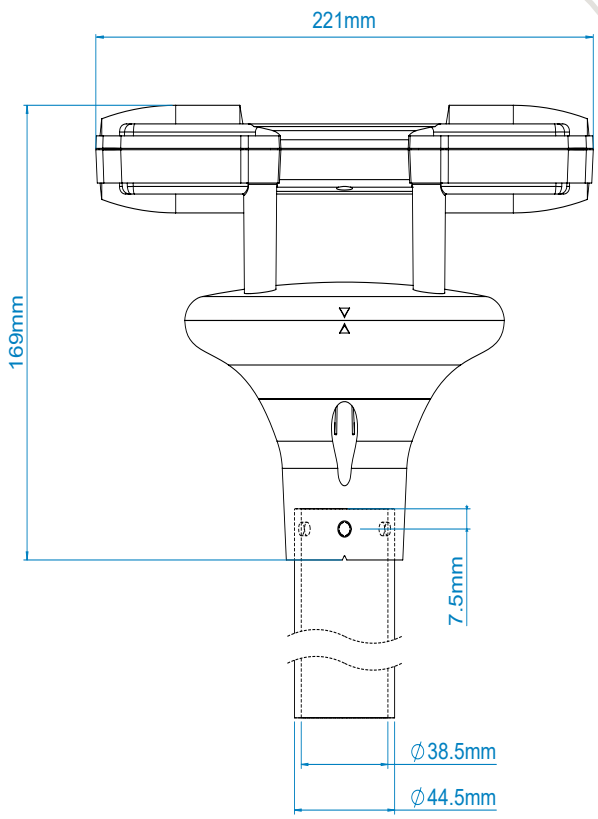

Designed and manufactured in the UK by Gill Instruments Limited.

Outputs	
Pulse	Tip 0.1mm

Power Supply	
Input voltage	5-30VDC
Average current consumption @ 12VDC	Typically ≤ 24mA

Mechanical	
Construction	UV stabilised thermoplastic
Fittings	Fit to 44.45mm (1.75in) pole or mast
Weight	0.67 kg
Connector type	8-way M12 connector

Environmental	
Protection Class	IP66
Operating temp.	-35°C to +70°C
Measurement temp.	0°C to +70°C*
Storage temp.	-40°C to +70°C

*Unit only accurately measures liquid precipitation

Compatible with other Gill products
MetConnect
MaxiMet GMX550
MaxiMet GMX551

Standard Equipment (supplied with product)
Optical precipitation sensor
Mating connector
User manual*   *downloadable from gillinstruments.com

HOSKIN SCIENTIFIC

hoskin.ca | sales@hoskin.ca
Coquitlam | Edmonton | Oakville | Montréal